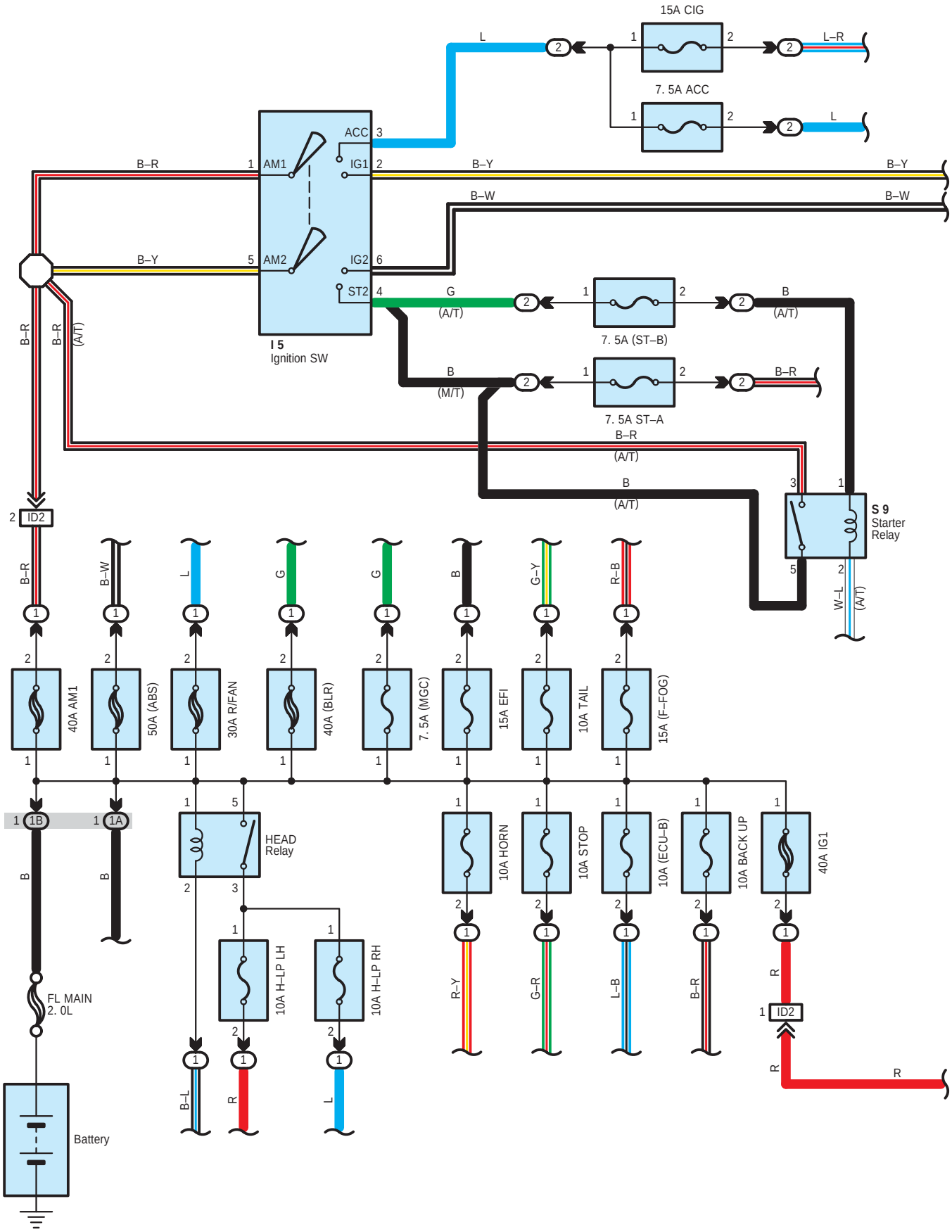
15A CIG
7. 5A ACC
L
L–R
ACC
IG1
IG2
ST2
AM1
AM2
B–R
B–Y
B–W
G
(A/T)
B
(M/T)
I 5
Ignition SW
7. 5A (ST–B)
7. 5A ST–A
S 9
Starter
Relay
W–L
ID2
40A AM1
50A (ABS)
30A R/FAN
40A (BLR)
7. 5A (MGC)
15A EFI
10A TAIL
15A (F–FOG)
HEAD
Relay
10A HORN
10A STOP
10A (ECU–B)
10A BACK UP
40A IG1
10A H–LP LH
10A H–LP RH
FL MAIN
2. 0L
Battery
R–Y
G–R
L–B
B–L
R

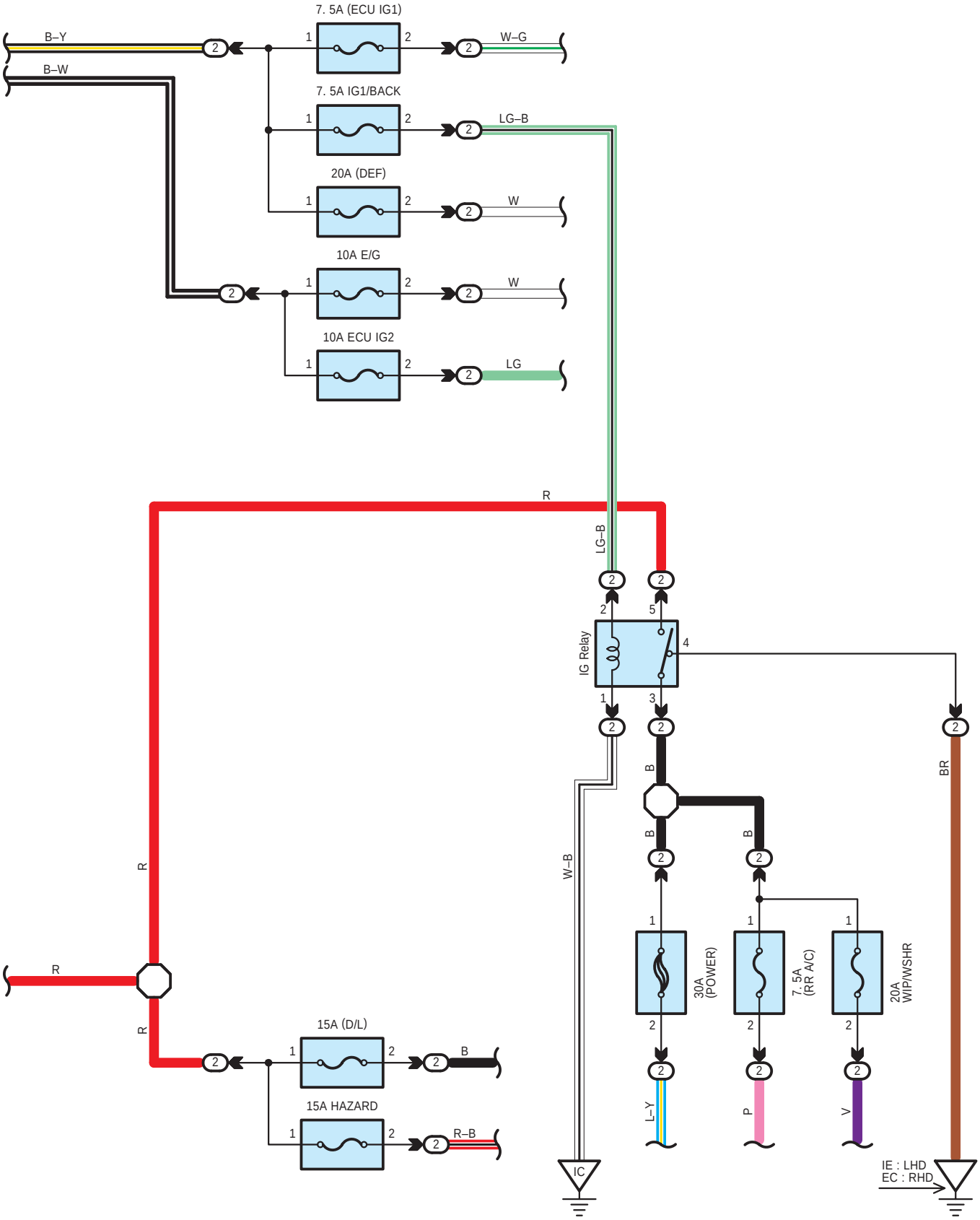
7. 5A (ECU IG1)
B–Y
B–W
W–G
7. 5A IG1/BACK
LG–B
20A (DEF)
W
10A E/G
W
10A ECU IG2
LG
R
LG–B
IG Relay
B
W–B
BR
30A (POWER)
7. 5A (RR A/C)
20A WIP/WSHR
L–Y
P
V
IC
IE : LHD
EC : RHD
15A (D/L)
B
15A HAZARD
R–B

○ : **Parts Location**

Code	See Page	Code	See Page	Code	See Page
I5	29 (LHD)	I5	39 (*6)	S9	39 (*6)
	37 (*5)	S9	29 (LHD)		

▭ : **Relay Blocks**

Code	See Page	Relay Blocks (Relay Block Location)
1	22	Engine Room R/B (Engine Compartment Right)
2	23 (LHD)	Fuse Block (Left Kick Panel)
	23 (RHD)	Fuse Block (Right Kick Panel)

▭ : **Junction Block and Wire Harness Connector**

Code	See Page	Junction Block and Wire Harness (Connector Location)
1A	22	Engine No.2 Wire and Engine Room J/B (Engine Compartment Right)
1B		

▭ : **Connector Joining Wire Harness and Wire Harness**

Code	See Page	Joining Wire Harness and Wire Harness (Connector Location)
ID2	44 (LHD)	Engine Room Main Wire and Instrument Panel Wire (Right Kick Panel)
	48 (*5)	Engine Room Main Wire and Instrument Panel Wire (Cowl Side Panel RH)
	49 (*6)	

▽ : **Ground Points**

Code	See Page	Ground Points Location
EC	46 (*3)	Left Fender Apron
	47 (*4)	
IC	44 (LHD)	Cowl Side Panel LH
	48 (*5)	Right Kick Panel
	49 (*6)	
IE	44 (LHD)	Cowl Side Panel LH

* 1 : LHD 3SZ–VE * 2 : LHD K3–VE * 3 : RHD 3SZ–VE * 4 : RHD K3–VE * 5 : RHD w/ Heater * 6 : RHD w/o Heater